# LCC Pico Node User Guide

## Version 2.6

This version utilizes the MCP2815 and MCP2562 discrete hardware components (chips) for the LCC interface.

The intent of this node is to control up to four strings of NeoPixels and/or other peripheral components on a model railroad layout. It may also be adapted to several other uses as there is facility to connect to all the exposed pins on the Raspberry Pi Pico microcontroller. J11, J12, J15, and J23 have power and ground pins in line to facilitate NeoPixel string connections. While it will work with either the Pico or Pico2, the latter is recommended due to enhanced capabilities.

There are no resistors on the Reset, Blue, and Gold button lines.

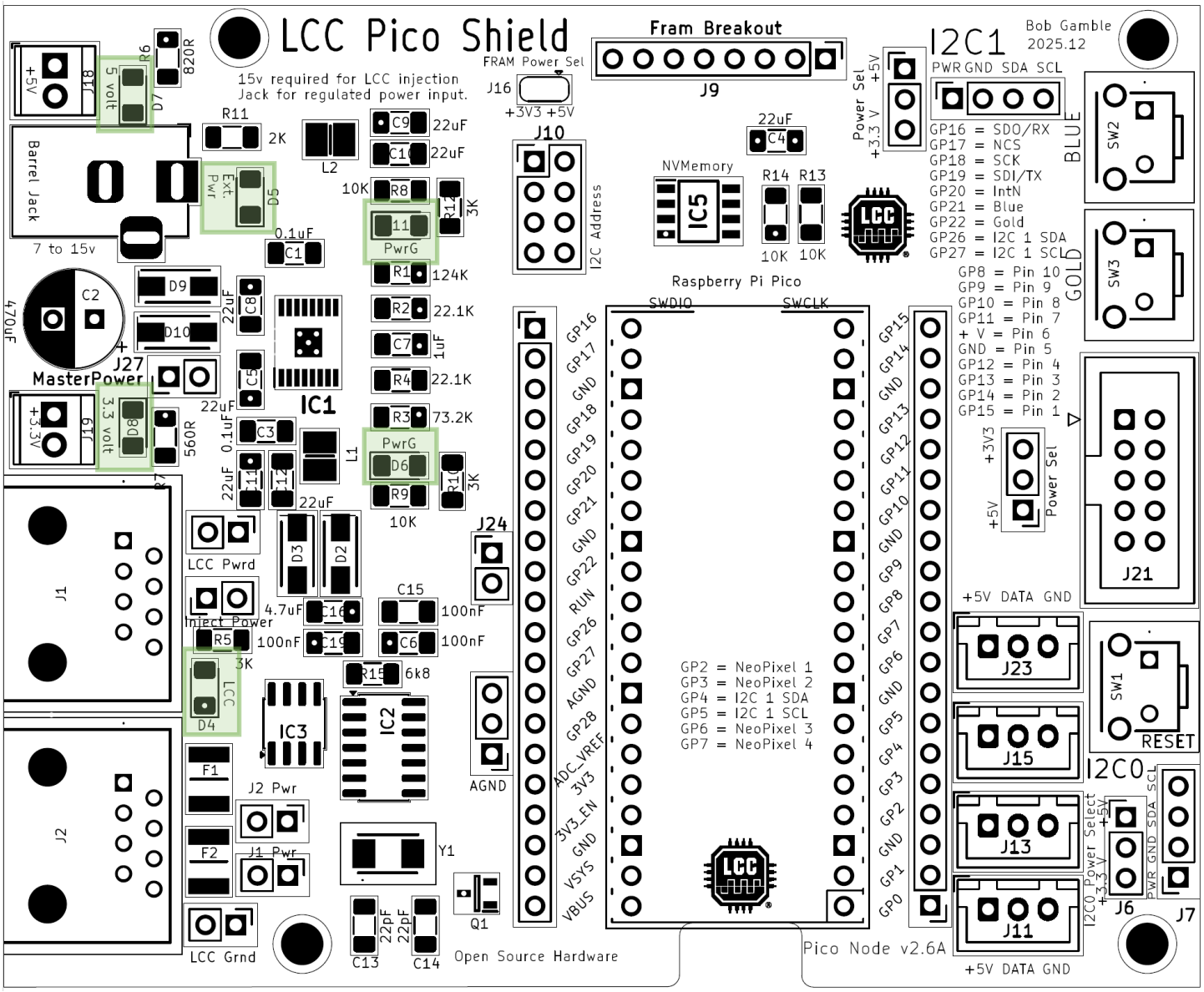


The node may be powered from the barrel jack or the LCC port. The barrel jack power should be at least seven (7) volts to power the microcontroller or fifteen (15) volts [or your preferred LCC voltage] if using the node to inject power to LCC. Amperage should be sufficient to drive any external devices plus about half an amp for the node plus another 1.5 amps if injecting power to LCC. There are six power LEDs. Five should be lit to indicate that the node is properly powered, six if barrel jack powered.

Node power configuration is accomplished with five jumpers located behind the LCC ports.

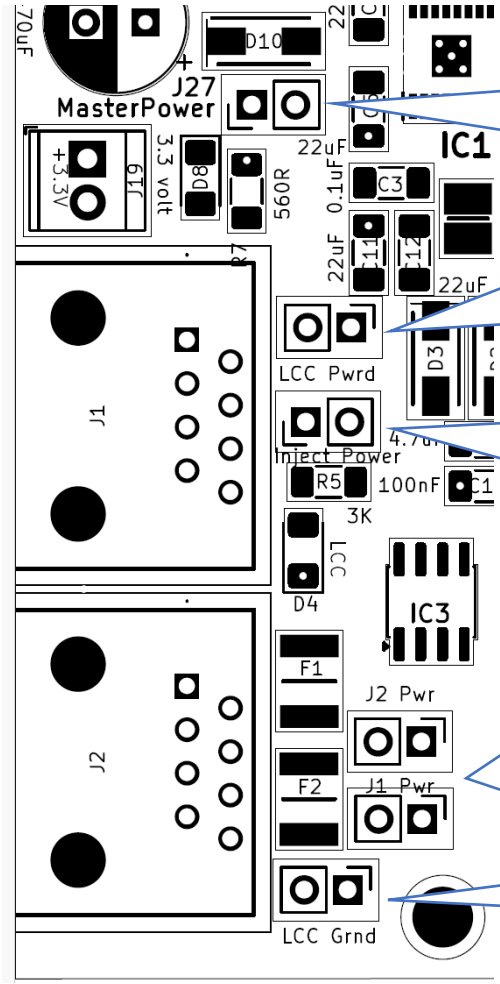


Master Power jumper should be bridged to power the node. A normally closed button may be plugged in here as a means to do a hardware reset should there be a problem with the power initialization due to a slow ramping power supply.

LCC Pwrd jumper should be bridged along with the LCC Grnd jumper if the node is to be powered from the LCC Port. Note that this will not provide power to the stepper driver which is powered exclusively from the barrel jack.

Inject Power should be bridged along with the LCC Grnd jumper if the node is intended to inject power to one or both of the LCC ports. 15 volts of at least 1.5 amps should be applied to the barrel jack in order to inject power.

J1 Pwr and J2 Pwr jumpers allow power isolation of one or both LCC ports. Generally, both jumpers would be bridged. If power injection or utilization was only desired in one direction, then the opposing jumper would be opened to isolate that leg. The isolated leg should be powered downstream as opening the jumper will cut off any power from the node.

LCC Grnd jumper should be bridged if the node is intended to inject power to or draw power from one or both of the LCC ports.

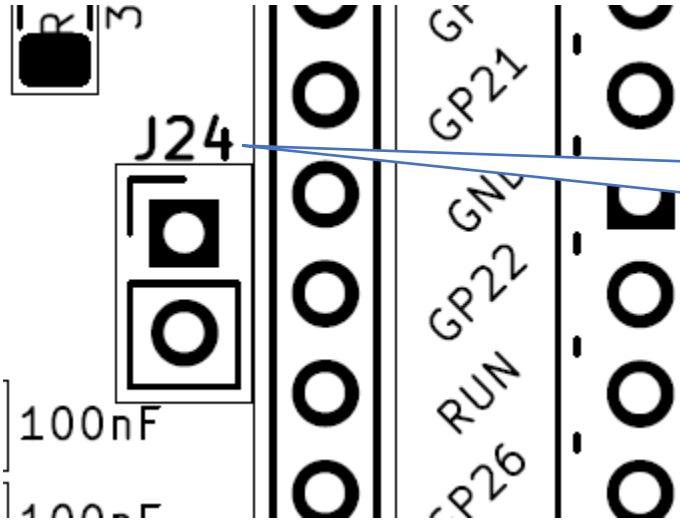


J24 jumper may be attached to a normally open button to function as a Reset as it is in parallel to the on board Reset button.

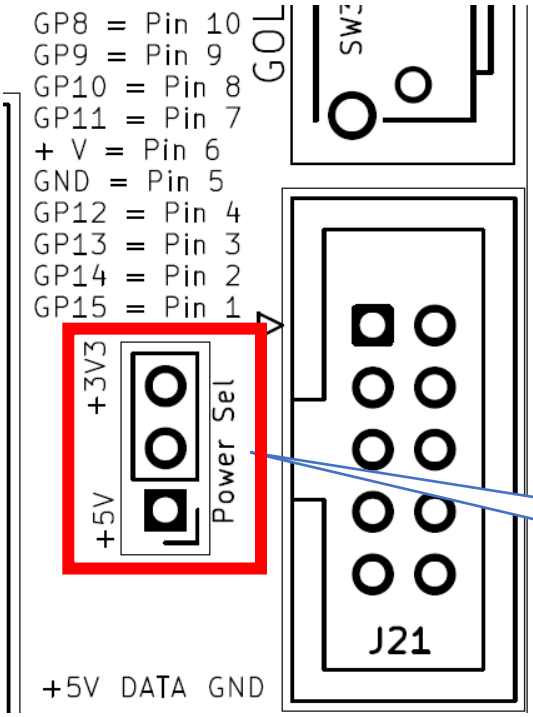


The power applied to the middle pins of the IDC connector may be selected by bridging the respective power selection jumpers. Pin assignments are noted on the PCB.

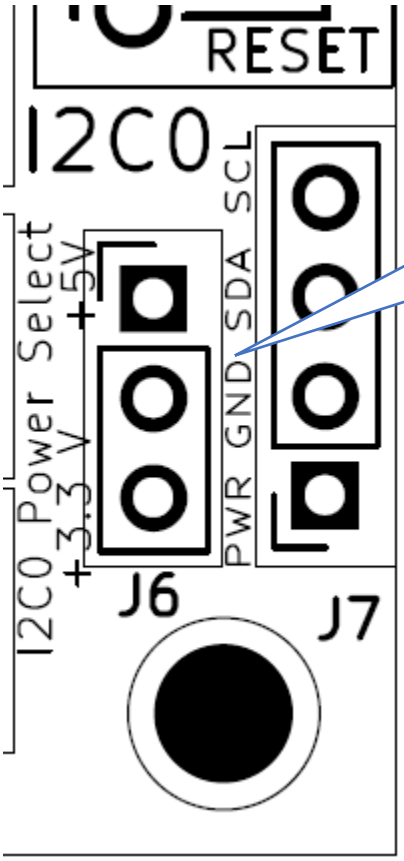


The power applied to the I2C may be selected by bridging the power selection jumper.

A similar jumper is adjacent to the I2C1 header.

# NVM Storage

Either 3.3V or 5V may be selected by these solder jumpers. The selection will apply to the soldered NVM module or FRAM Breakout header

I2C address may be selected by the lower three pairs of headers. The selection will apply to the soldered NVM module or FRAM Breakout header

An Adafruit FRAM breakout board may be attached to this header.

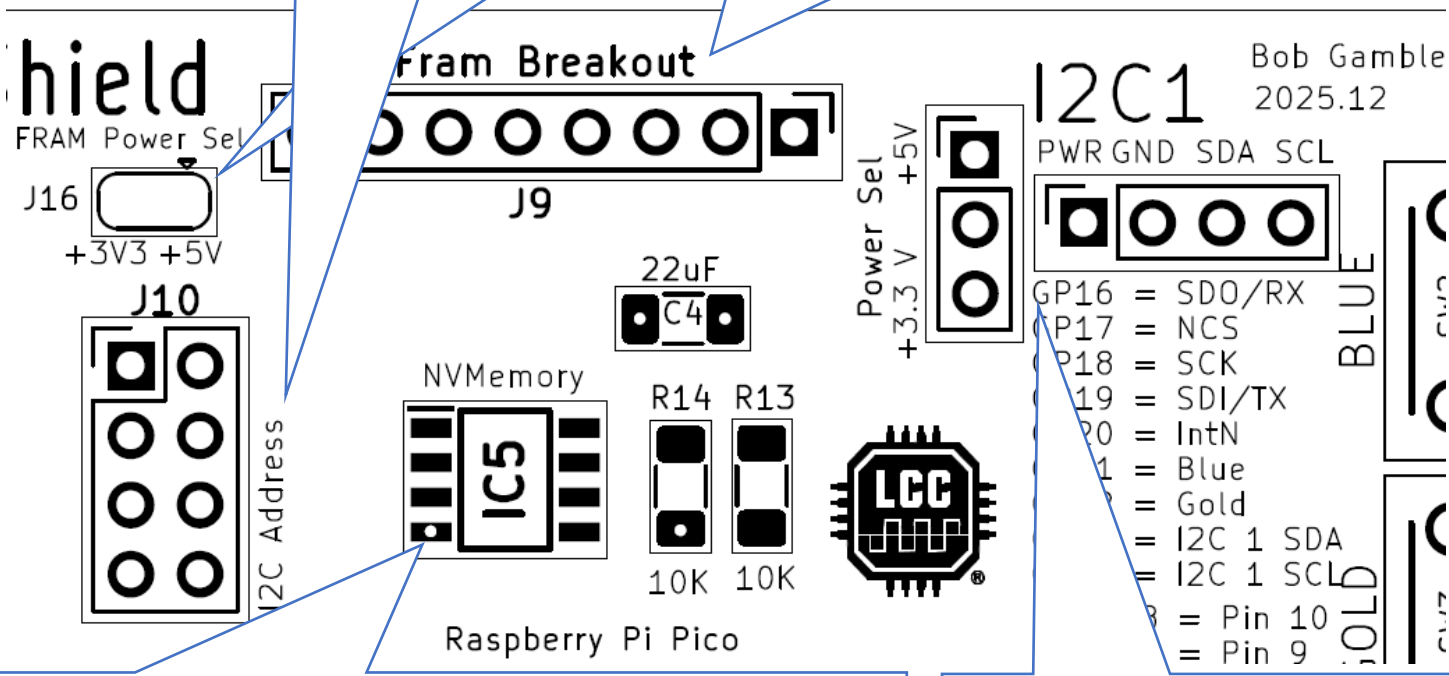


I2C nonvolatile memory may be populated if desired to reduce strain on the Pico flash. Parts compatible with these should work.

BR24G512F-3AGTE2 I2C BUS(2-Wre) 512K

MB85RC256VPF-G-BCERE1 256kbit FRAM with I2C

I2C modules including NVM may be attached to this header. Either 3.3V or 5V may be selected by the adjacent jumpers.

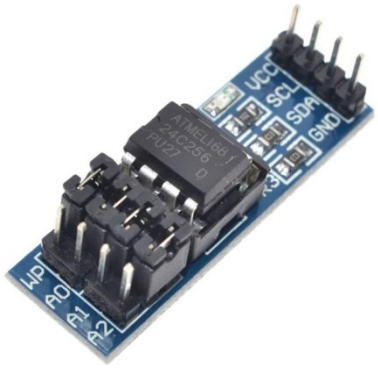


External NVM may be attached to either the I2C1 header, the FRAM Breakout header, or soldered down to the IC5 footprint. If either of the latter two choices are used, the I2C Address jumpers may be used to select non-default addresses or implement write protection. Otherwise, these would be functions of the module plugged into the I2C1 header.

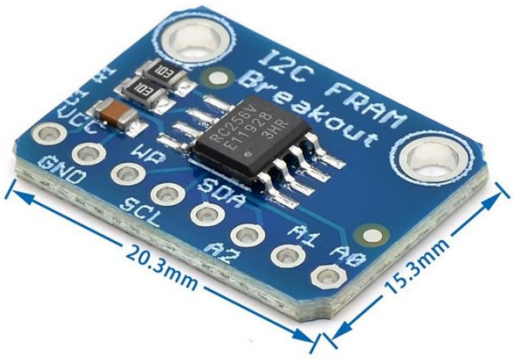


A typical part would be a module utilizing an AT25C256 chip (left) or RC256V FRAM (right).

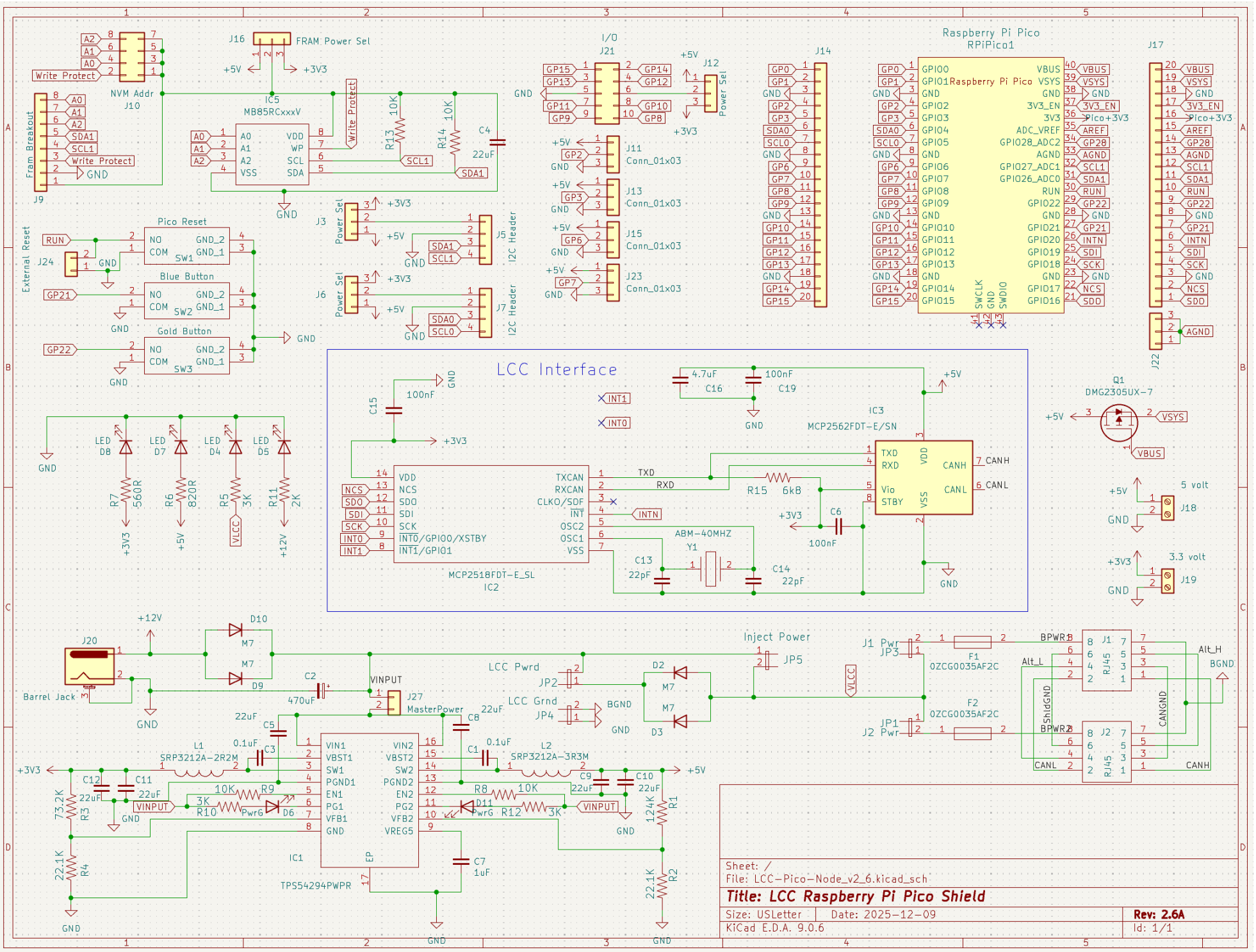
Raspberry Pi Pico
RPiPico1
Raspberry Pi Pico
I/O
J21
J12
Power Sel
J11
Conn_01x03
J13
Conn_01x03
J15
Conn_01x03
J23
Conn_01x03
J14
J17
J22
J16
FRAM Power Sel
NVM Addr
J10
Write Protect
Fram Breakout
J9
IC5
MB85RCxxxV
R13
10K
R14
10K
C4
22uF
J3
J6
J5
J7
I2C Header
External Reset
J24
Pico Reset
SW1
Blue Button
SW2
Gold Button
SW3
LED D8
LED D7
LED D4
LED D5
R7 560R
R6 820R
R5 3K
R11 2K
LCC Interface
C15
100nF
C16
4.7uF
C19
100nF
IC3
MCP2562FDT-E/SN
R15 6kB
C6
100nF
ABM-40MHZ
Y1
C13
22pF
C14
22pF
MCP2518FDT-E_SL
IC2
Q1
DMG2305UX-7
J18
5 volt
J19
3.3 volt
J20
Barrel Jack
D10
M7
D9
M7
C2
470uF
VINPUT
J27
MasterPower
LCC Pwrd
JP2
LCC Grnd
JP4
BGND
D2
M7
D3
M7
Inject Power
JP5
VLCC
J1 Pwr
JP3
F1
0ZCG0035AF2C
F2
0ZCG0035AF2C
JP1
J2 Pwr
J1
J2
RJ45
BPWR1
BPWR2
Alt_L
Alt_H
BGND
ShldGND
CANGND
CANL
CANH
C5
22uF
C8
22uF
C3
0.1uF
C1
0.1uF
L1
SRP3212A-2R2M
L2
SRP3212A-3R3M
C12
22uF
C11
22uF
R3
73.2K
R4
22.1K
R9
10K
R10
3K
D6
PwrG
R8
10K
R12
3K
D11
PwrG
C9
22uF
C10
22uF
R1
124K
R2
22.1K
C7
1uF
IC1
TPS54294PWPR
Sheet: /
File: LCC-Pico-Node_v2_6.kicad_sch
Title: LCC Raspberry Pi Pico Shield
Size: USLetter
Date: 2025-12-09
Rev: 2.6A
KiCad E.D.A. 9.0.6
Id: 1/1

# Bill of Materials

| Qty | Value | Reference | Mfr. # | Description |
|---|---|---|---|---|
| 5 | 0.1uF, 100nF | C1,C3,C6,C15,C19 | C1206C104K3RAC7411 | Multilayer Ceramic Capacitors MLCC - SMD/SMT 25V 0.1uF X7R 1206 10% |
| 1 | 470uF | C2 | REF1016471M035K | Aluminum Electrolytic Capacitors - Radial Leaded Radial Leaded Aluminum Electrolytic Capacitor |
| 7 | 22uF | C4,C5,C8,C9,C10,C11,C12 | CL31A226MOCLNNC | Multilayer Ceramic Capacitors MLCC - SMD/SMT 22uF+/-20% 16V X5R 3 1206 |
| 1 | 1uF | C7 | CL31B105KAHNFNE | Multilayer Ceramic Capacitors MLCC - SMD/SMT 1uF+/-10% 25V X7R 32 1206 |
| 2 | 22pF | C13,C14 | C1206C220J3HACTU | Multilayer Ceramic Capacitors MLCC - SMD/SMT 25V 22pF X8R 1206 5% |
| 1 | 4.7uF | C16 | CL31B475KOHNFNE | Multilayer Ceramic Capacitors MLCC - SMD/SMT 4.7uF+/-10% 16V X7R 1206 |
| 4 | M7 | D2,D3,D9,D10 | M7 | Rectifiers Diode, SMA, 1000V, 1A |
| 2 | 0ZCG0035AF2C | F1,F2 | 0ZCG0035AF2C | Resettable Fuses - PPTC |
| 1 | TPS54294PWPR | IC1 | TPS54294PWPR | Switching Voltage Regulators 4.5-18Vin Dual 2A Ou t Sync SD Cnvrtr A A 595-TPS54294PWP |
| 1 | MCP2518FDT-E_SL | IC2 | MCP2518FDT-E/SL | CAN Interface IC Stand-alone Low Power CAN FD Controller w/SPI Interface Grade1 |
| 1 | MCP2562FDT-E/SN | IC3 | MCP2562FDT-E/SN | CAN Interface IC CAN Flexible Data Rate Transceiver |
| 1 | MB85RCxxxV | IC5 | BR24G512F-3AGTE2 | EEPROM I2C BUS(2-Wre) 512K SOP8 EEPROM |
| 2 | RJ45 | J1,J2 | MTJ-880X1 | Modular Connectors / Ethernet Connectors 8P8C TYPE 0 GLD FLSH BLK |
| 1 | SRP3212A-2R2M | L1 | SRP3212A-2R2M | Power Inductors - SMD Ind,3.2x2.5x1mm,2.2uH+/-20%,4A,shd AEC-Q200 |
| 1 | SRP3212A-3R3M | L2 | SRP3212A-3R3M | Power Inductors - SMD Ind,3.2x2.5x1mm,3.3uH+/-20%,3.1A,shd AEC-Q200 |
| 1 | DMG2305UX-7 | Q1 | DMG2305UX-7 | MOSFETs P-Ch ENH FET -20V 52mOh -5A |
| 1 | 124K | R1 | ERA-8AEB1243V | Thin Film Resistors - SMD 1206 124Kohm 25ppm 0.1% AEC-Q200 |
| 2 | 22.1K | R2,R4 | ERA-8AEB2212V | Thin Film Resistors - SMD 1206 22.1Kohm 25ppm 0.1% AEC-Q200 |
| 1 | 73.2K | R3 | ERA-8AEB7322V | Thin Film Resistors - SMD 1206 73.2Kohm 25ppm 0.1% AEC-Q200 |
| 3 | 3K | R5,R10,R12 | | |
| 1 | 820R | R6 | RT1206FRE07820RL | Thin Film Resistors - SMD 1/4W 820 ohm 1% 50ppm |
| 1 | 560R | R7 | RT1206FRE07560RL | Thin Film Resistors - SMD 560 OHM 1% 50PPM 1/4W |
| 4 | 10K | R8,R9,R13,R14 | | |
| 1 | 2K | R11 | RT1206FRE072KL | Thin Film Resistors - SMD 1/4W 2K ohm 1% 50ppm |
| 1 | 6k8 | R15 | RT1206DRD076K8L | Thin Film Resistors - SMD 6.8 kOhms 250 mW 0.5 % 1206 |
| 1 | Raspberry Pi Pico | RPiPico1 | | |
| 3 | Pico Reset | SW1,2,3 | TS11-674-43-BK-160-RA-D | Tactile Switches 6 x 7.4 mm 4.3 mm 160 gf Black Right Angle Through Hole SPST |
| 1 | ABM-40MHZ | Y1 | ABM3-40.000MHZ-B2-T | Crystals Xtal 5032 2-SMD 40MHz Tol +/-20ppm Stab +/-50ppm -20C - 70C 18pF 25 Ohms |
| 4 | LED | D4,D5,D7,D8 | 156120VS75000 | Single Color LEDs WL-SMRW SMD RvMt Mon Wtrclr Rect 1206BtGn |
| 2 | PwrG | D6,D11 | 156120VS75000 | Single Color LEDs WL-SMRW SMD RvMt Mon Wtrclr Rect 1206BtGn |

## Connections:

| | |
|---|---|
| J3,J6,J12 | 3.3/5 Volt Power Selection |
| J5,J7 | I2C Header |
| J9 | Fram Breakout header |
| J10 | NVM Address |
| J11,J13,J15,J23 | NeoPixel Headers |
| J14,J17 | Pico Pinout Conn_01x20 |
| J16 | FRAM Power Select |
| J18 | 5 volt power out |
| J19 | 3.3 volt power out |
| J20 | Barrel Jack power input |

| | |
|---|---|
| J21 | 10 pin IDC connector I/O |
| J22 | AGND headers |
| J24 | External Reset header |
| J27 | MasterPower bridge header |
| JP1 | J2 LCC Power enable |
| JP2 | Power from LCC enable |
| JP3 | J1 LCC Power enable |
| JP4 | LCC Ground enable |
| JP5 | Inject Power to LCC enable |

# Software

## Board:

The author uses the RP2040 board library by Earle Philhower

https://arduino-pico.readthedocs.io/en/latest/install.html

## For LCC support:

https://github.com/openlcb/OpenLCB_Single_Thread

Or

https://github.com/JimKueneman/OpenLcbCLib

## CAN Hardware:

ACAN2517 Arduino library.

## External Storage:

I2C_EEPROM Arduino library by Rob Tillaart

FRAM_I2C Arduino library by Rob Tillaart

## NeoPixel:

NeoPixelBus by Makuna Arduino library (preferred)

Or

NeoPixelConnect Arduino library by Alan Yorinks.

## Other preferred libraries for the RPi Pico:

*Display*

```
#include <TFT_eSPI.h>      // Hardware-specific display library

#include "my_bb_captouch.h"    //capacitive touch driver
```

*Servos*

```
#include <ServoEasing.hpp>  // great library for getting slow servo action, including bounces

#include <PCA9685_servo_driver.h>

#include <PCA9685_servo.h>
```

*Stepper Motor*

```
#include "AccelStepper.h"          // by Mike McCauley
```